REV	ECN NO.	DESCRIPTION	DRN	APP'D	DATE

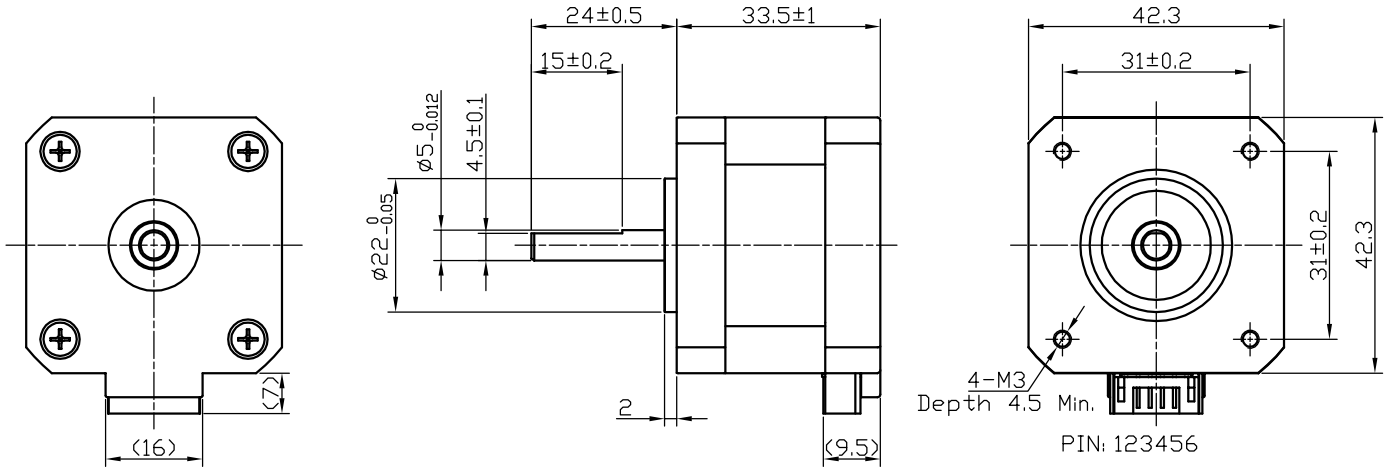

Wiring Diagram(接线图)

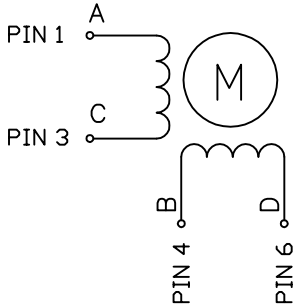

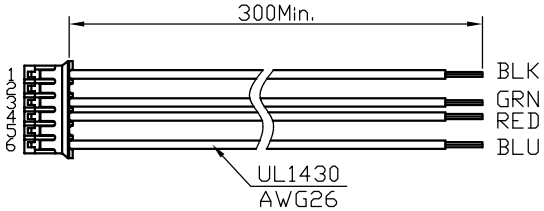

Exciting Sequence(励磁顺序)

CW DIRECTION	STEP	A	C	B	D
⇩	1	+		+	
	2		+	+	
	3		+		+
	4	+			+
	1	+		+	

CW,see from flange side
(顺时针，从法兰侧看)

SPECIFICATION

STEP ANGLE	步距角	1.8°/full step(整步)
STEP ANGLE ACCURACY	步距角精度	±5%
NUMBER OF PHASE	绕组相数	2
RATED VOLTAGE	额定电压	2.8 VDC
RATED CURRENT	额定电流	1.33 A
RESISTANCE/PHASE	每相电阻	2.1±10% ohms@20°C
INDUCTANCE/PHASE	每相电感	2.5±20% mH@1kHz
HOLDING TORQUE	保持转矩	2200 g.cm
PULL OUT TORQUE	运行转矩	
BACK EMF	反电动势	
DETENT TORQUE	定位转矩	
ROTOR INERTIA	转子转动惯量	54 g.cm ²
WEIGHT	重量	280 g
TEMPERATURE RISE	温升	Less than 80K(小于80开)
SOURCE VOLTAGE	驱动器电压	24 VDC
INSULATION CLASS	绝缘等级	B 130°C
DIELECTRIC STRENGTH	介电强度	500VAC 1MIN
INSULATION RESISITANCE	绝缘电阻	100MOhm @500VDC
IP CODE	防护等级	IP30
OPERATION AMBIENT	使用环境	Ambient temperature:-20...+50°C,humidity Max. 85%(No condensation)
STORAGE AMBIENT	存储环境	Ambient temperature:-20...+85°C,humidity Max. 85%(No condensation)

PERMISSIBLE RADIAL+AXIAL FORCE
(允许的轴向和径向力)

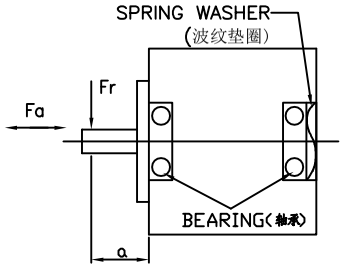

AXIAL-FORCE	轴向压力	Fa=10 N Max.
DISTANCE	距离	a=20 mm
RADIAL-FORCE	径向压力	Fr=28 N Max.
SHAFT RADIAL PLAY	径向间隙	0.02mm Max. @4N
SHAFT AXIAL PLAY	轴向间隙	0.08mm Max. @4N

Preliminary

UNLESS OTHERWISE SPECIFIED
TOLERANCES:
DECIMALS: ANGULAR:
.x ±0.5
.xx ±0.25 ±0°30'
.xxx ±0.1
UNIT: mm
DO NOT SCALE DRAWING

MATERIAL | CONTR. | FIRST ANGLE PROJECTION

DESIGN	YL	DATE	210923
CHECK			
APPD			
SCALE	NTS		
SHEET	OF		

P/N.	3.1.01.042.****
TITLE	Specifications
USED ON	FL42STD33-1334AF
DWG NO.	
REV	A

FULLING MOTOR